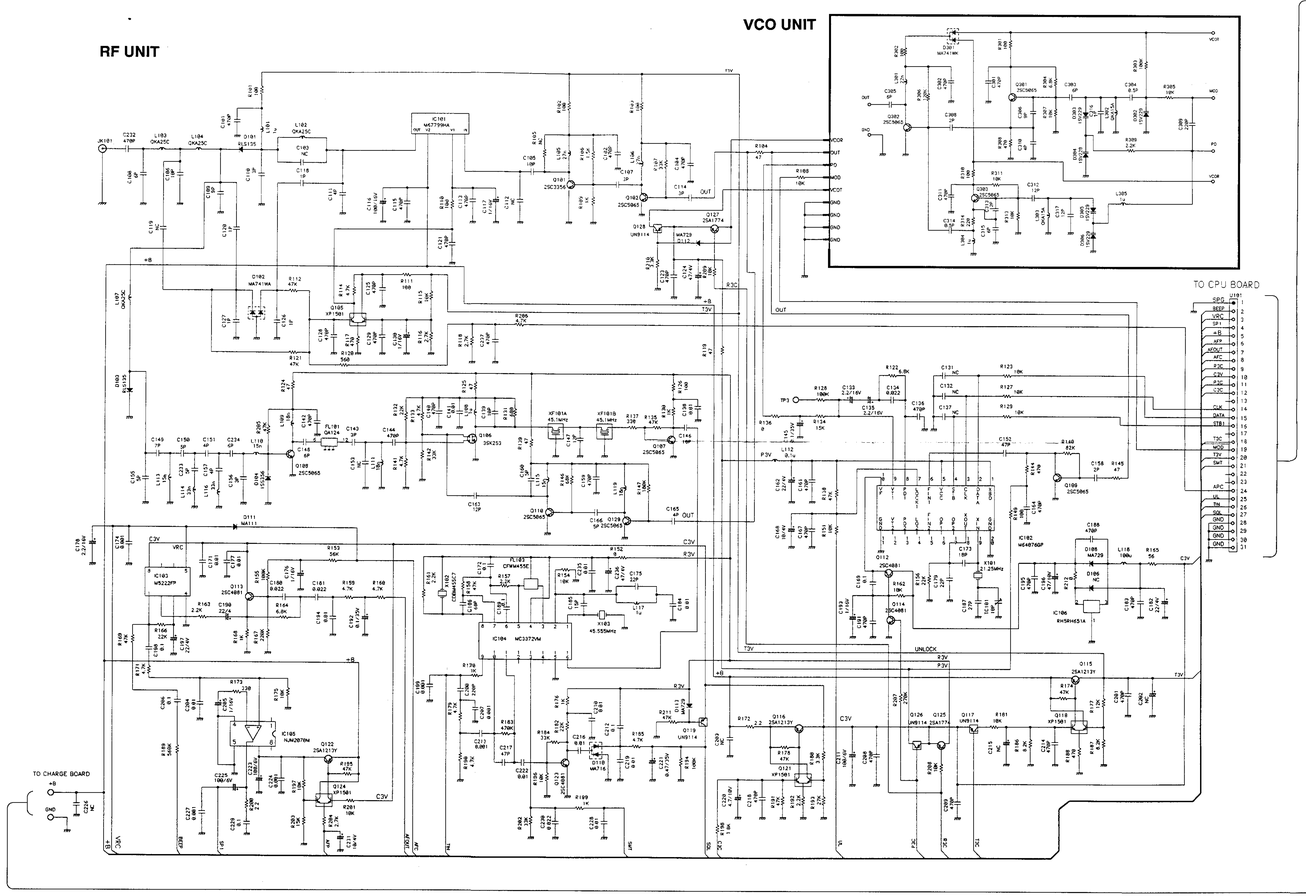

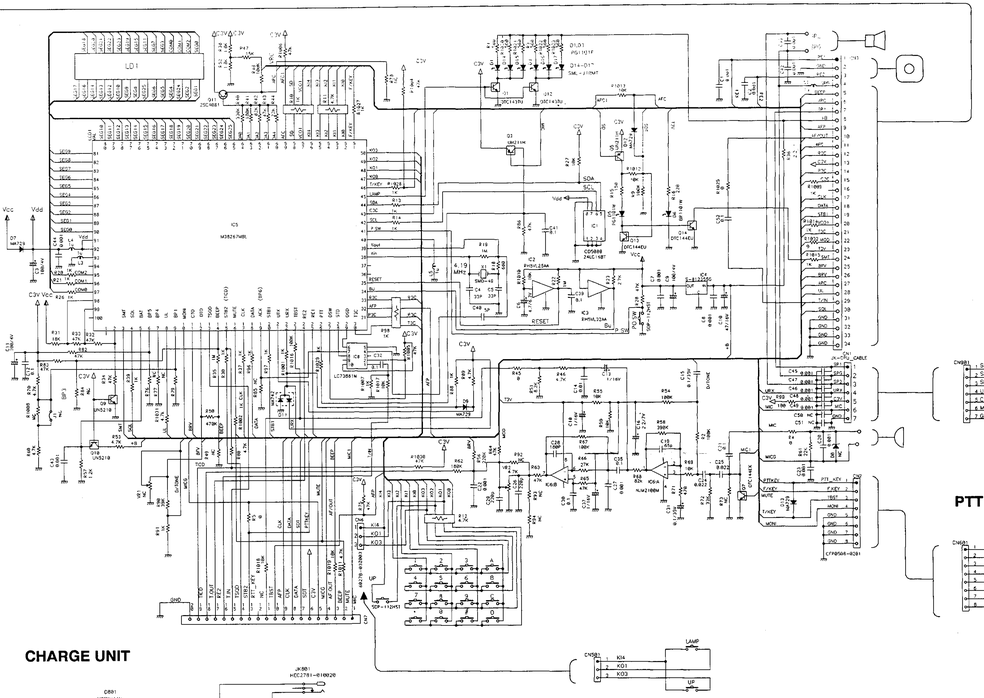

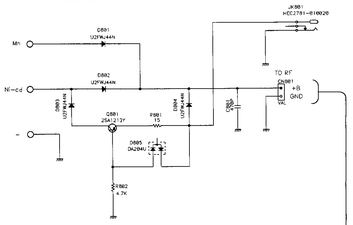

SCHEMATIC DIAGRAM DJ-491

Specifications are subject to change without notice or obligation.

PK0066