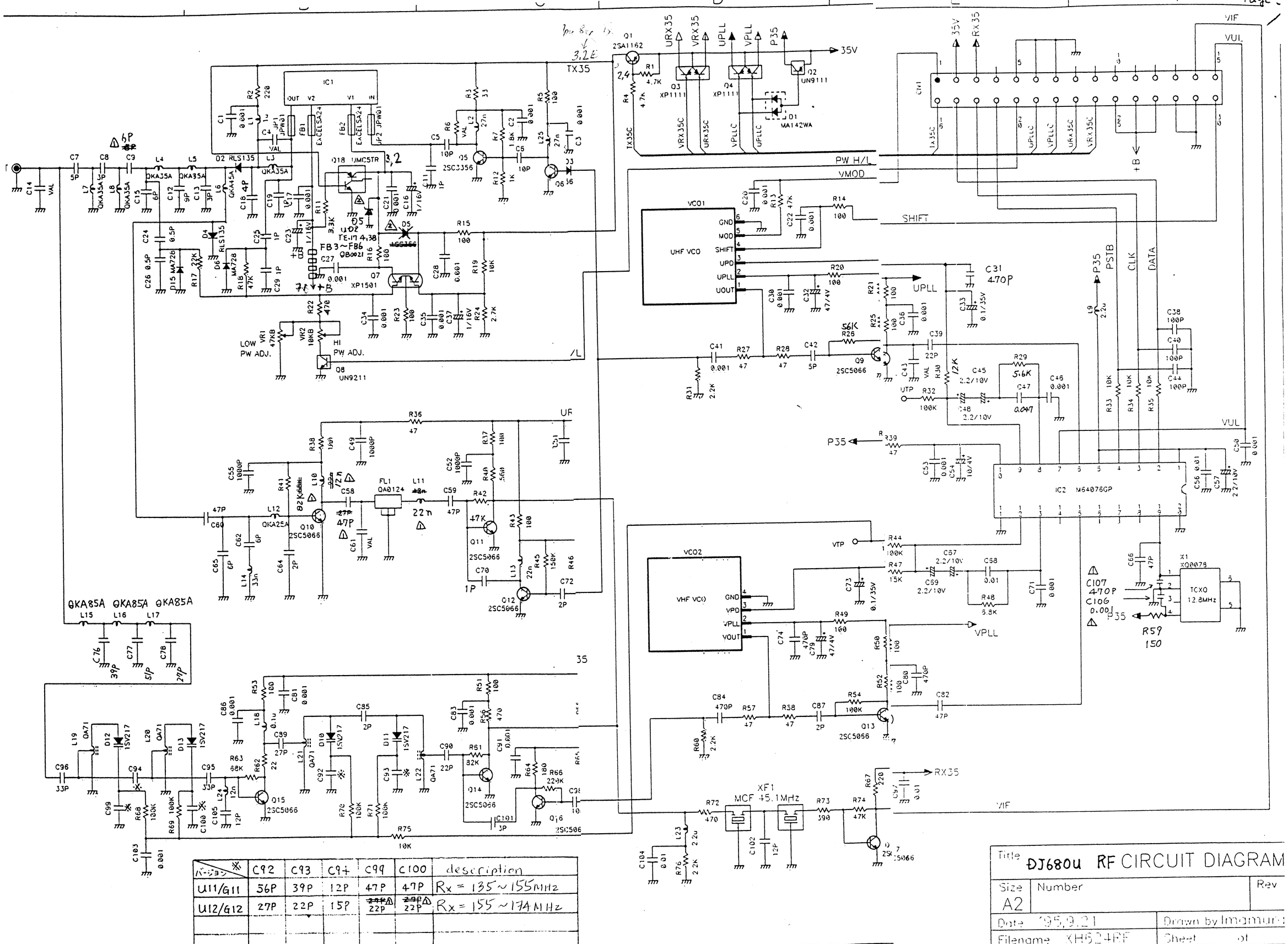

バージョン	C92	C93	C94	C99	C100	description
U11/G11	56P	39P	12P	47P	47P	Rx = 135~155MHz
U12/G12	27P	22P	15P	22P	22P	Rx = 155~174MHz

Title	DJ680U RF CIRCUIT DIAGRAM	
Size A2	Number	Rev
Date 95.9.21		Drawn by Imamura
Filename XH524RF		Sheet of

△ x9 AE1800
△ x2 AE1816

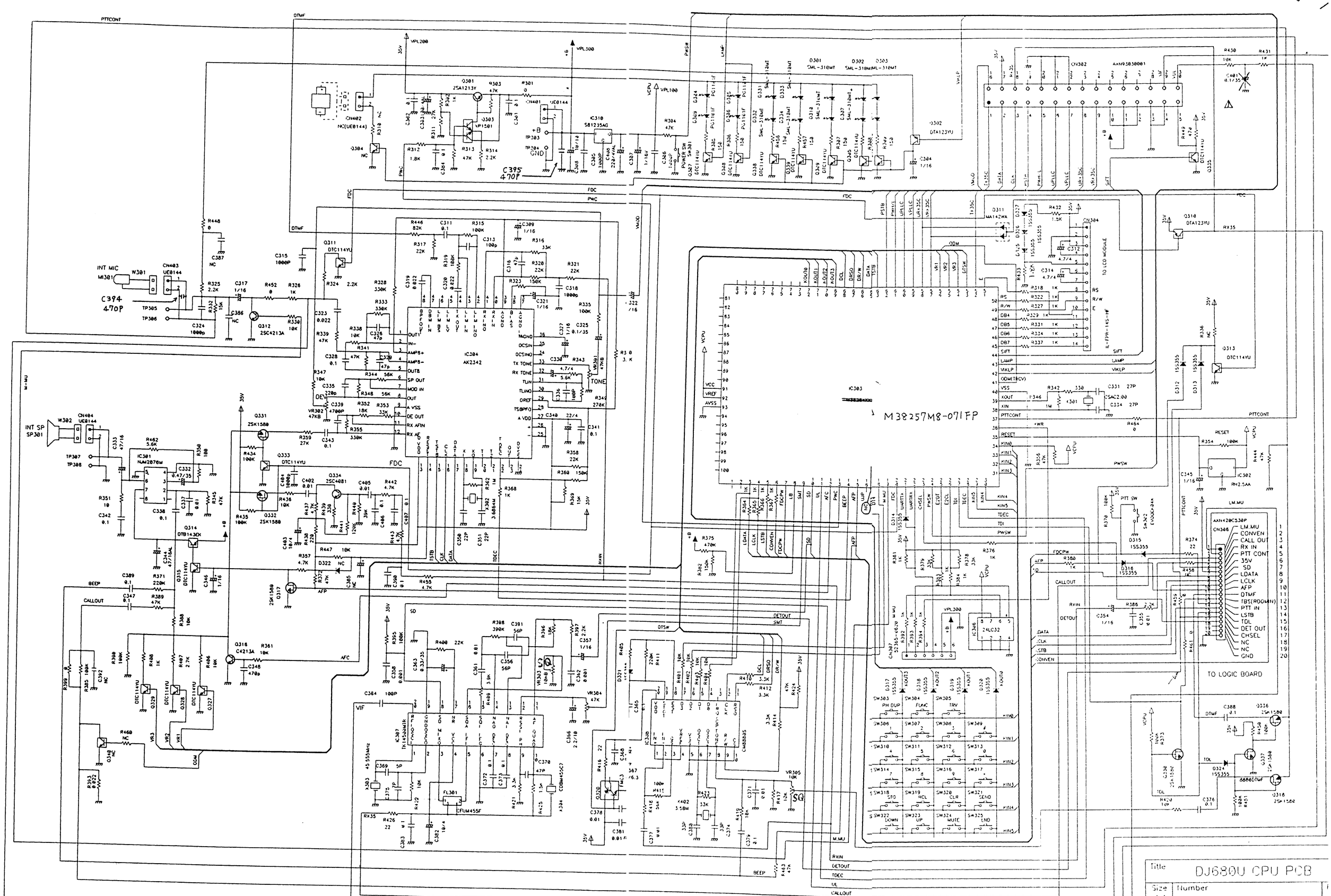

Title	DJ680U CPU PCB	
Size A1	Number	
Date	1995.11.01	Drawn by
Filename		Sheet

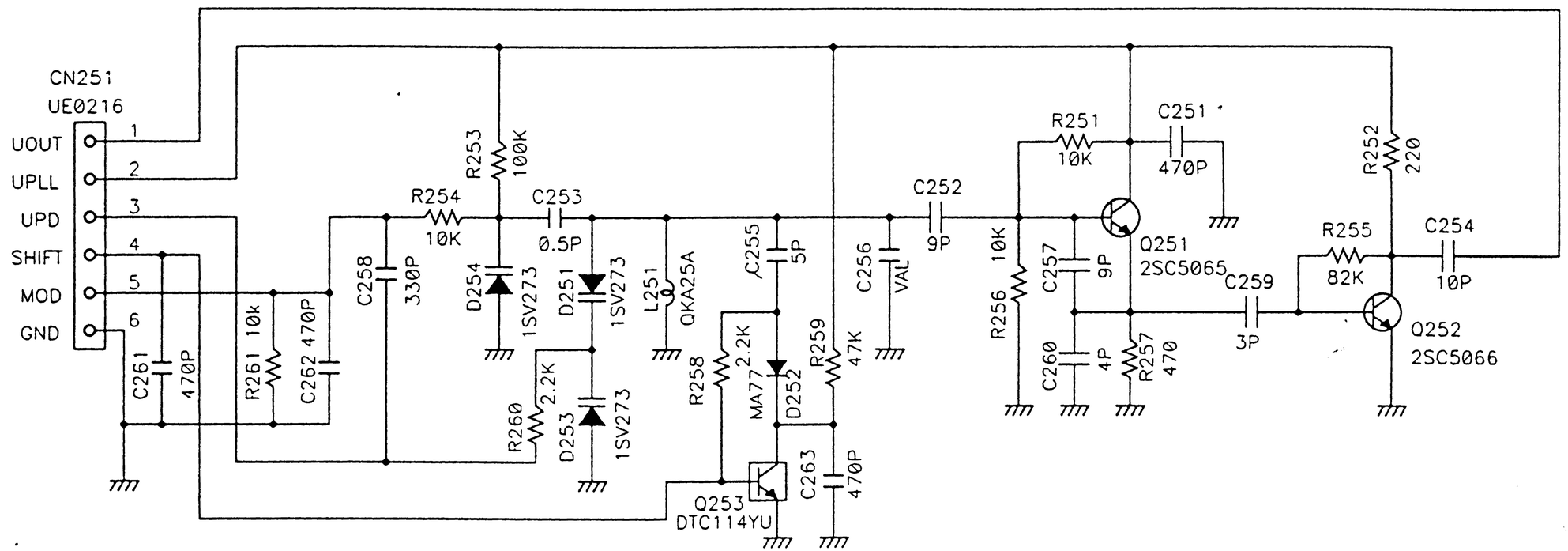

担当	
検印	
承認	

Title
DJ680 U11/U12 UHF VCO Circuit

Size	Number	Rev
A4		

Date '95.6.27	Drawn by Imamura
Filename 624VCO.S01	Sheet of

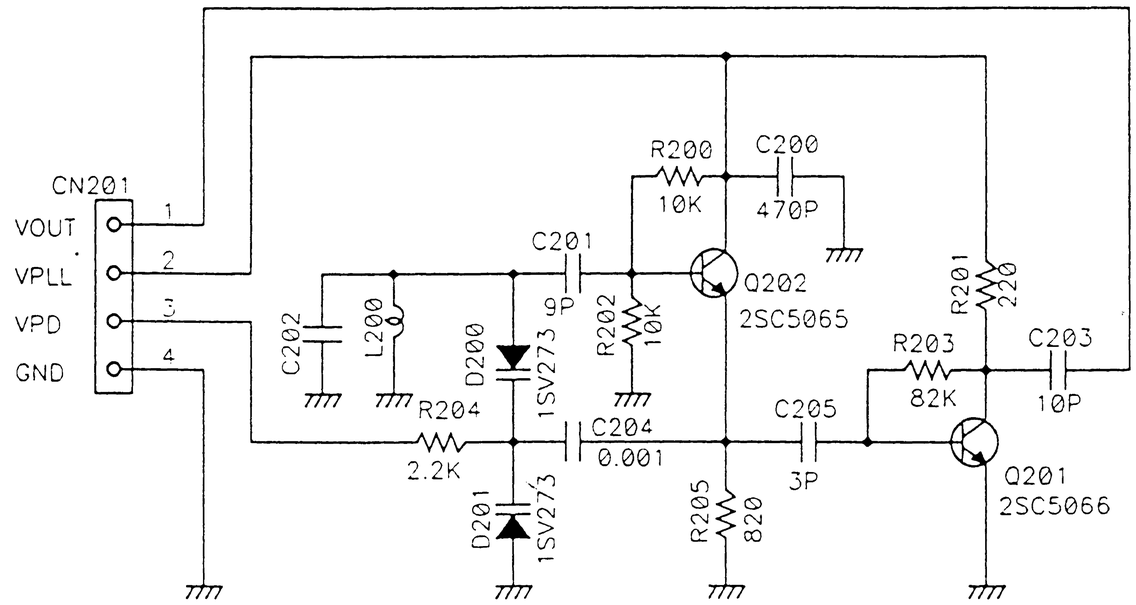

	L200	C202		Description
U11/G11	QA120	1P		Rx-135~155
U12/G12	QA123	NC		Rx-155~174

担当	
検印	
承認	

Title DJ680 U11/U12 VHF VCO Circuit

Size	Number	Rev
A4		

Date '95.6.27	Drawn by Imamuar
Filename 624VCO.S01	Sheet of