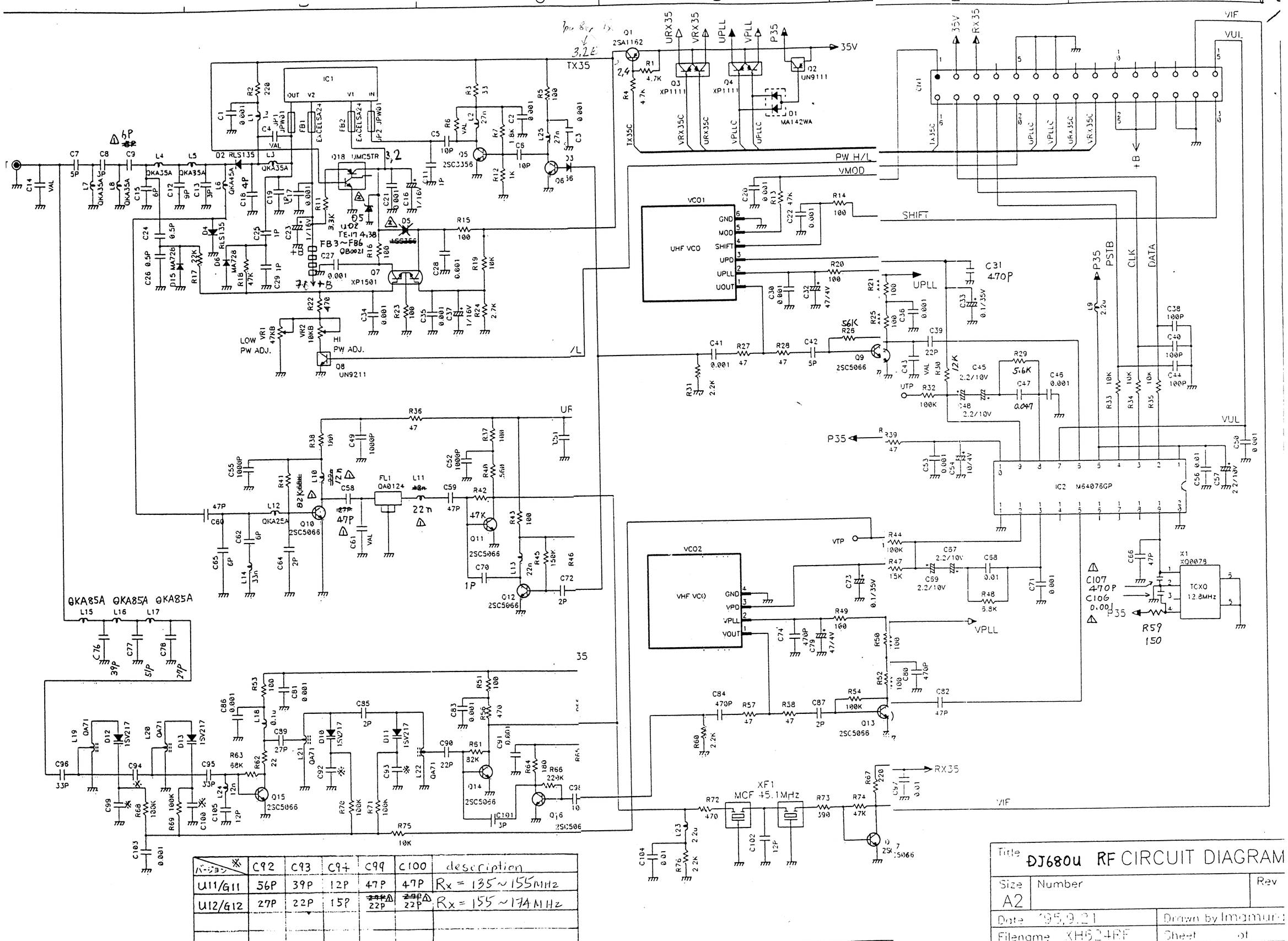

バージョン	C92	C93	C94	C99	C100	description
U11/G11	56P	39P	12P	47P	47P	Rx = 135~155MHz
U12/G12	27P	22P	15P	22P	22P	Rx = 155~174MHz

Title DJ680U RF CIRCUIT DIAGRAM

Size	Number	Rev
A2		

Date 95.9.21 | Drawn by Imamura

Filename XH524RF | Sheet of

△ x9 AE1800

△ x2 AE1816

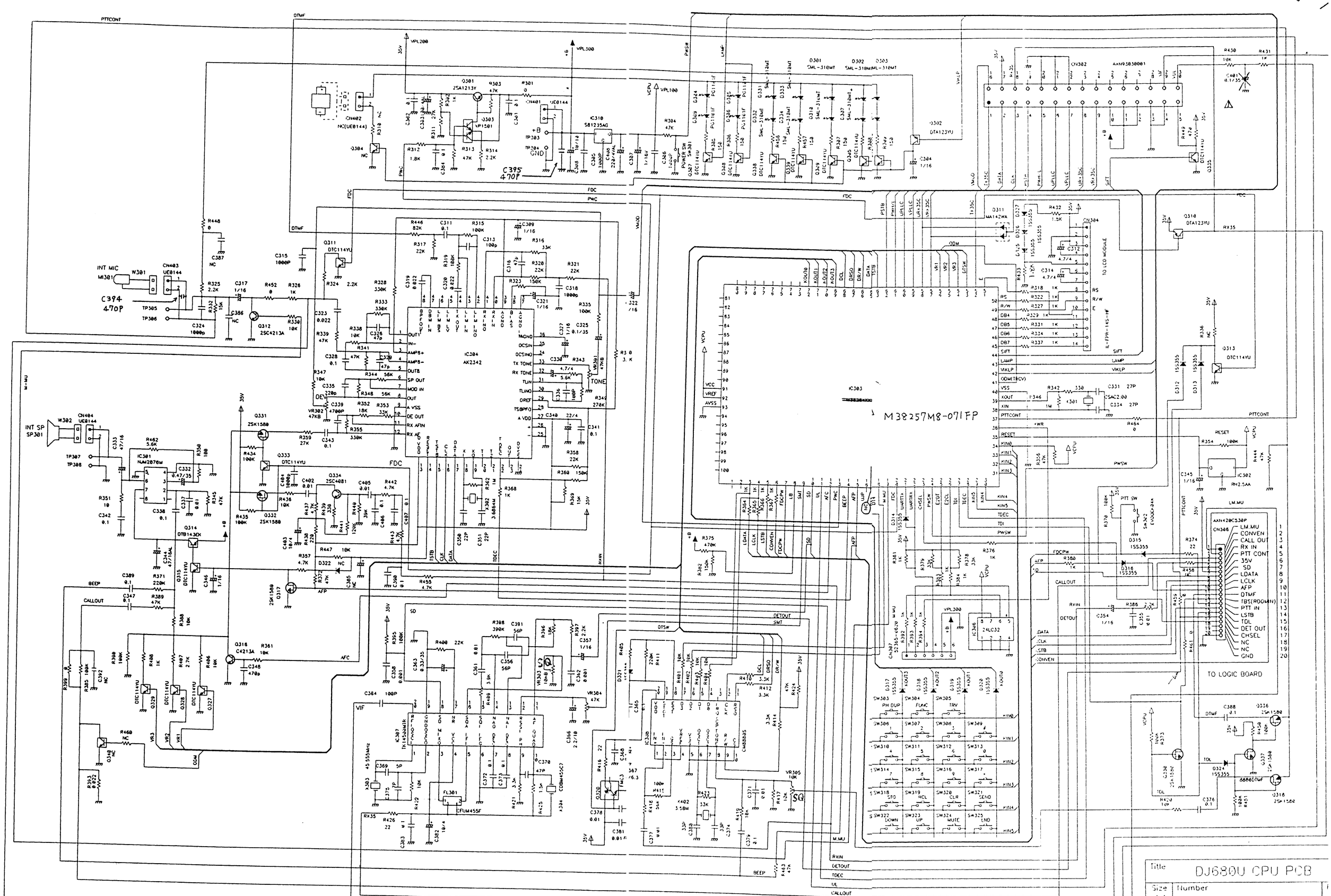
M38257M8-071FP
IC304 AK2342
IC303
IC310 S81235AG
IC301 NJM2070M
IC302 RH2.5AA
IC306 24LC32
IC307 TK14584MK
CN302 AXN9S30001
CN306 AXN420C530P
CN304 IL-FPR-14S-HF
TO LCD MODULE
TO LOGIC BOARD
INT MIC
INT SP SP301
C394 470P
C395 470P
Title DJ680U CPU PCB
Size A1
Number
Date 1995.11.01
Drawn by
Filename
Sheet

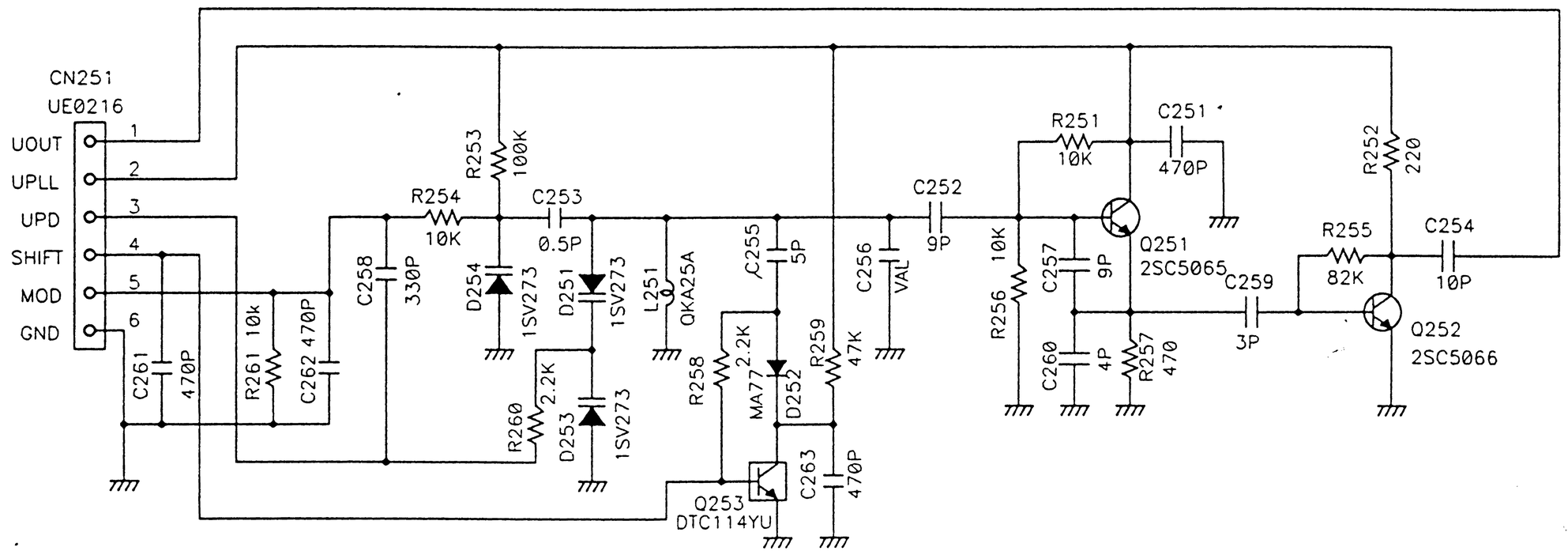

担当	
検印	
承認	

Title
DJ680 U11/U12 UHF VCO Circuit

Size	Number	Rev
A4		

Date '95.6.27	Drawn by Imamura
Filename 624VVCO.S01	Sheet of

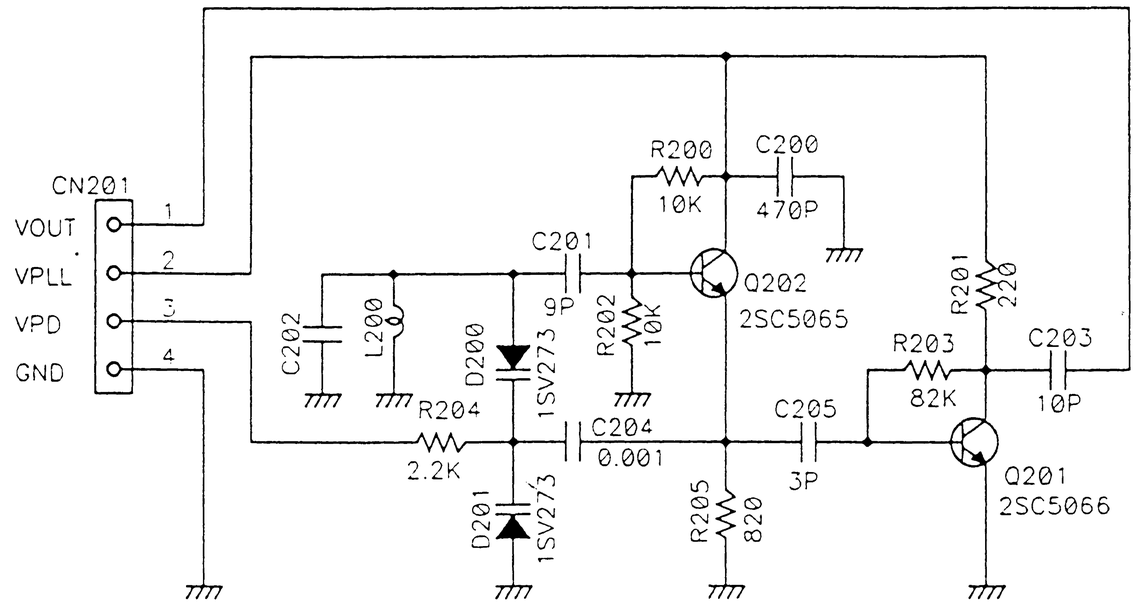

	L200	C202		Description
U11/G11	QA120	1P		Rx-135~155
U12/G12	QA123	NC		Rx-155~174

Title	DJ680 U11/U12 VHF VCO Circuit
Size	A4
Number	
Rev	
Date	'95.6.27
Drawn by	Imamuar
Filename	624VCO.S01
Sheet	of

担当 検印 承認